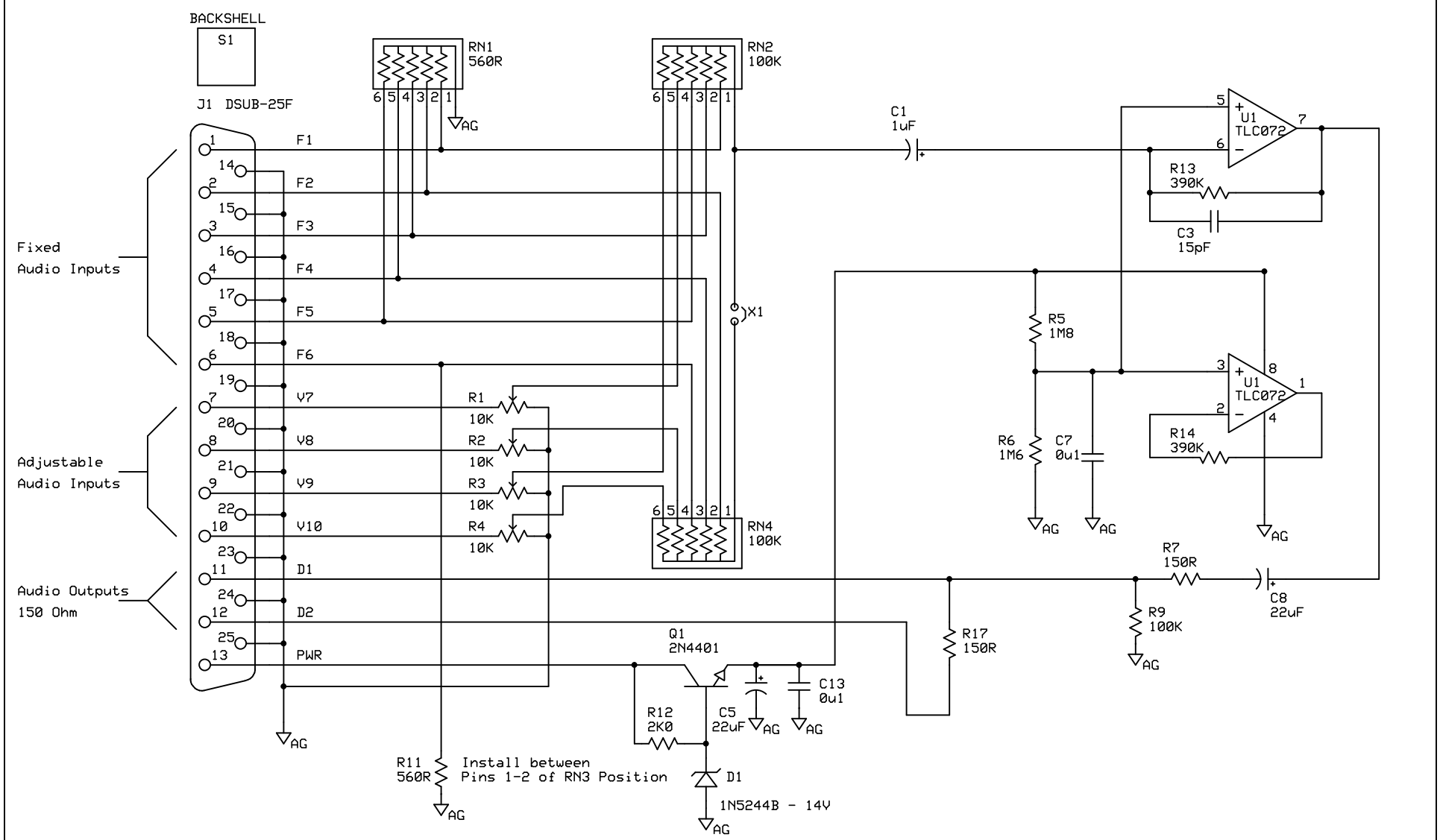

(c) 2011 Vx Aviation, all rights reserved

AVAILABLE FROM WWW.MAKERPLANE.ORG

(c) 2015
Vx Aviation

Vx Aviation		
AMX-2A/2B (28V)		
V. Little	AMX-4A VX11003A2 January 16, 2011	Page 1 of 1