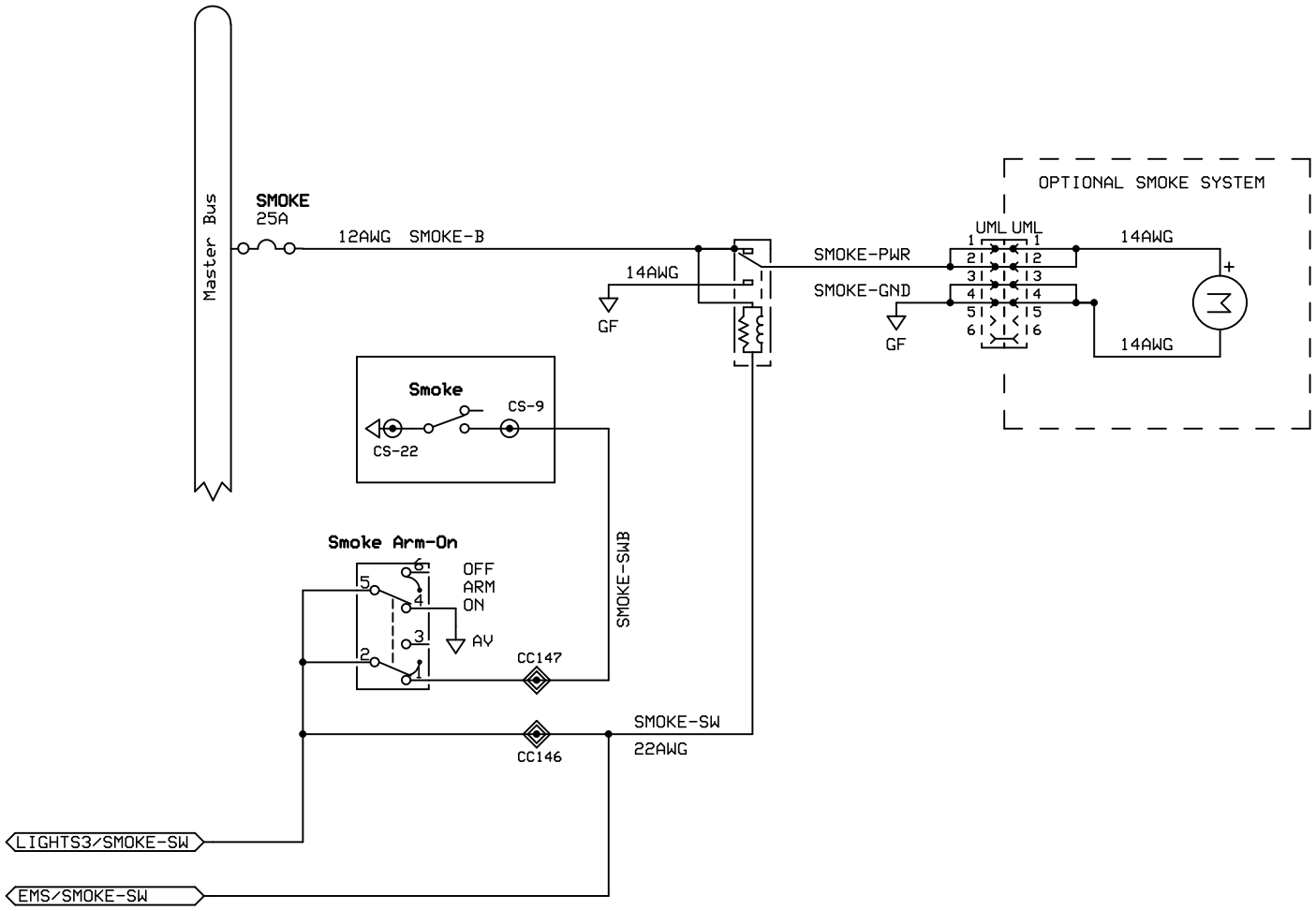

Denotes CPC panel connector

Indicates pilot control stick connector

RV-4/HR-II 4325-251		
Electrical System		
V. R. Little	(c) 2017 Yx Aviation	SMOKE