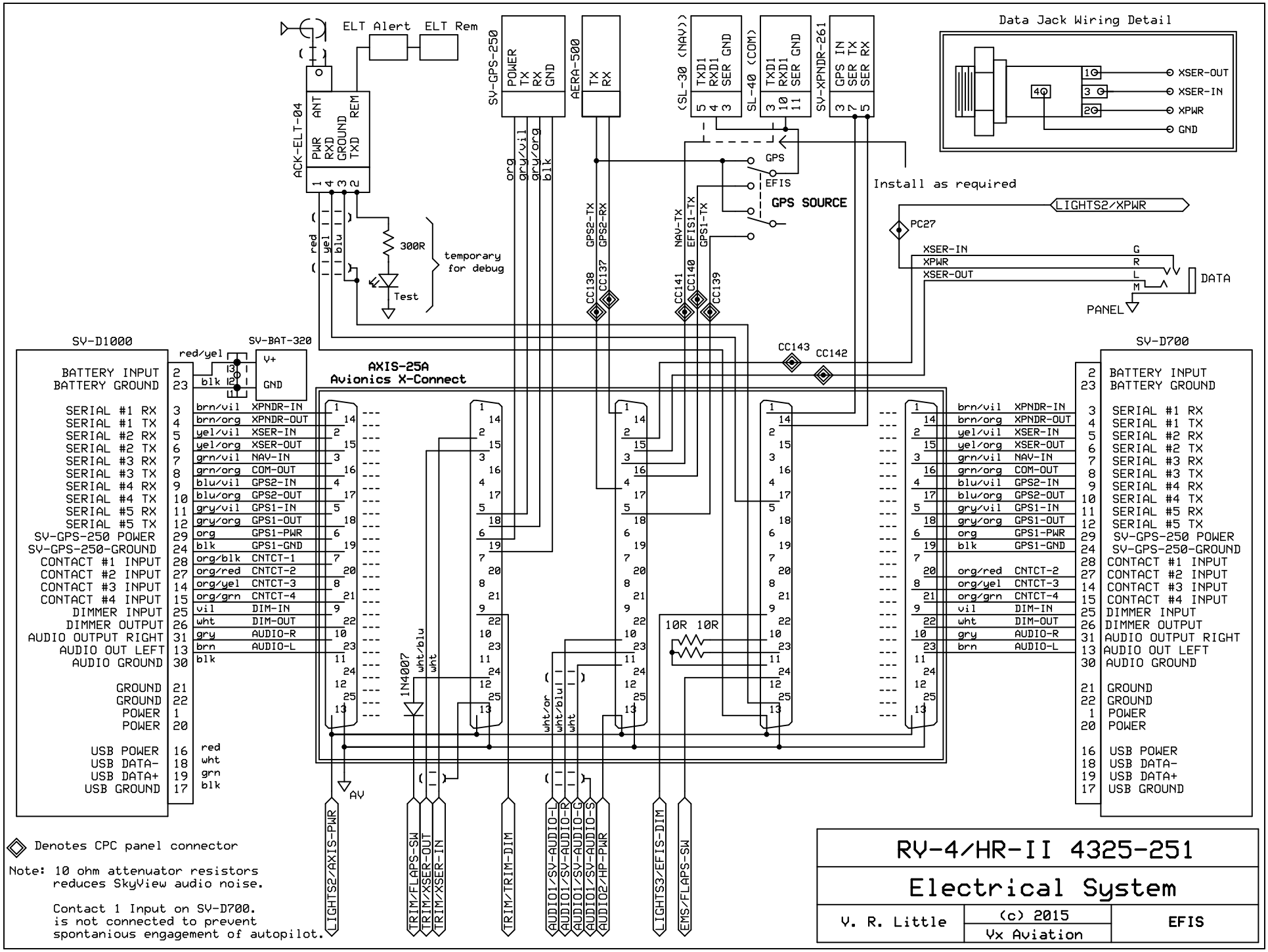
ELT Alert
ELT Rem
ACK-ELT-04
ANT
REM
PWR
RXD
GROUND
TXD
SV-GPS-250
POWER
TX
RX
GND
AERA-500
TX
RX
(SL-30 (NAV))
TXD1
RXD1
SER GND
SL-40 (COM)
TXD1
RXD1
SER GND
SV-XPNDR-261
GPS IN
SER TX
SER RX
Data Jack Wiring Detail
XSER-OUT
XSER-IN
XPWR
GND
GPS
EFIS
GPS SOURCE
Install as required
LIGHTS2/XPWR
PC27
XSER-IN
XPWR
XSER-OUT
DATA
PANEL
300R
Test
temporary for debug
CC138
CC137
CC141
CC140
CC139
CC143
CC142
SV-D1000
SV-BAT-320
V+
GND
AXIS-25A
Avionics X-Connect
1N4007
10R 10R
AV
SV-D700
BATTERY INPUT
BATTERY GROUND
SERIAL #1 RX
SERIAL #1 TX
SERIAL #2 RX
SERIAL #2 TX
SERIAL #3 RX
SERIAL #3 TX
SERIAL #4 RX
SERIAL #4 TX
SERIAL #5 RX
SERIAL #5 TX
SV-GPS-250 POWER
SV-GPS-250-GROUND
CONTACT #1 INPUT
CONTACT #2 INPUT
CONTACT #3 INPUT
CONTACT #4 INPUT
DIMMER INPUT
DIMMER OUTPUT
AUDIO OUTPUT RIGHT
AUDIO OUT LEFT
AUDIO GROUND
GROUND
POWER
USB POWER
USB DATA-
USB DATA+
USB GROUND
LIGHTS2/AXIS-PWR
TRIM/FLAPS-SW
TRIM/XSER-OUT
TRIM/XSER-IN
TRIM/TRIM-DIM
AUDIO1/SV-AUDIO-L
AUDIO1/SV-AUDIO-R
AUDIO1/SV-AUDIO-G
AUDIO1/SV-AUDIO-S
AUDIO2/HP-PWR
LIGHTS3/EFIS-DIM
EMS/FLAPS-SW
Denotes CPC panel connector
Note: 10 ohm attenuator resistors reduces SkyView audio noise.
Contact 1 Input on SV-D700. is not connected to prevent spontanious engagement of autopilot.
RV-4/HR-II 4325-251
Electrical System
V. R. Little
(c) 2015
Vx Aviation
EFIS