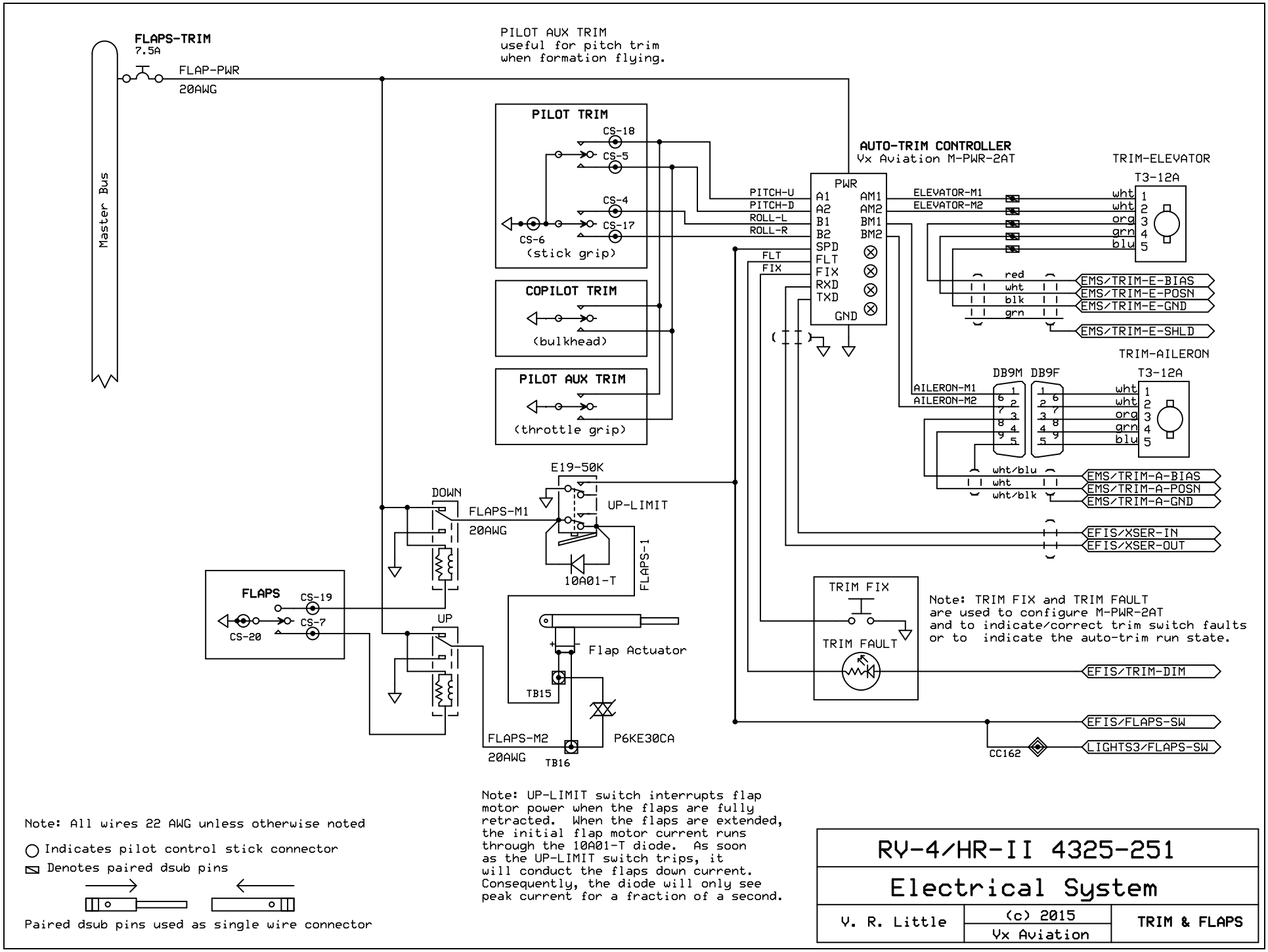

Note: UP-LIMIT switch interrupts flap motor power when the flaps are fully retracted. When the flaps are extended, the initial flap motor current runs through the 10A01-T diode. As soon as the UP-LIMIT switch trips, it will conduct the flaps down current. Consequently, the diode will only see peak current for a fraction of a second.

Note: All wires 22 AWG unless otherwise noted

○ Indicates pilot control stick connector

▭ Denotes paired dsub pins

Paired dsub pins used as single wire connector

RV-4/HR-II 4325-251		
Electrical System		
V. R. Little	(c) 2015 Vx Aviation	TRIM & FLAPS